HSF Pb RoHS

Recommended P.C.B Layout(Top Side)
(PCB BOARD TOLERANCE±0.05)

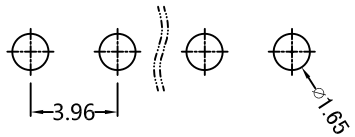

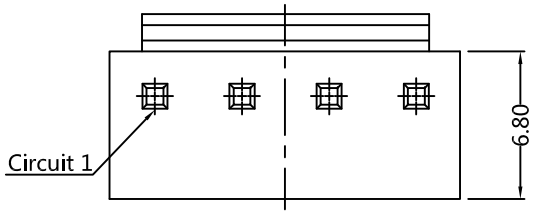

PART NUMBER CODING

W39603-1 XX S XX X X X

- XX: No.of pins 02-12P
- XX: Contact plating SN:Tin
- X: Color W=White
- X: Packing B=PE Bag
- X: Series No. 1=Type 1 2=Type 2

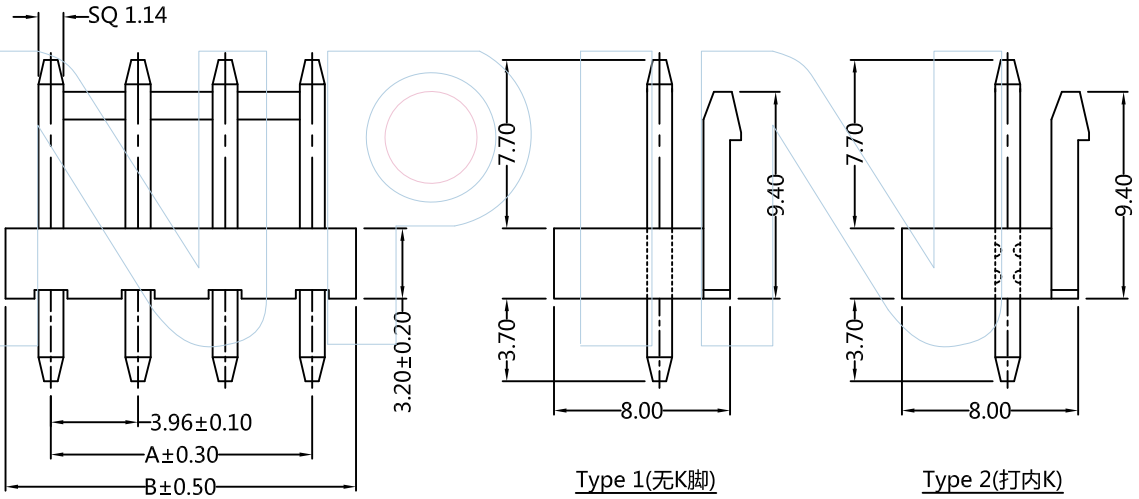

Pins	Dimensions	
	A	B
02	3.96	8.02
03	7.92	11.98
04	11.88	15.94
05	15.84	19.90
06	19.80	23.86
07	23.76	27.82
08	27.72	31.78
09	31.68	35.74
10	35.64	39.70
11	39.60	43.66
12	43.56	47.62

WINPIN
Tel:+86 769 82581808
E-Mail:sales@winpin.net
FAX:+86 769 81766192
Http:www.winpin.net

PART NO: W39603-1XXSXXXXX

TITLE: VH3.96mm Wafer XXP 有靠背180° PA66

NOTES:
Current Rating:7.0AMP
Voltage Rating:250V AC/DC
Withstand Voltage:1500V AC/DC
Contact Resistance:10mΩ Max
Insulation Resistance:1000MΩ Min
Operation Temperature:-25℃ to +85℃
Applicable Terminal:T39603-PXX1
Applicable Housing:H39603-1XXX1

MATERIAL:
Contact:Brass
Contact Plating:Sn over Ni
Insulator:PA66, UL94-V0

UNLESS OTHERWISE SPECIFIED DIMENSIONS ARE IN METRIC
TOLERANCES ARE:
DECIMALS X.X:±0.40 X.XX:±0.25 X.XXX:±0.15
Angle ± 3°

SCALE	1:1
UNIT	MM
PROJ.	
SHEET	

REV	DATE	MODIFICATION DESCRIPTIO	DRAW	CHECKED	APPROVE
A0	2020/06/25	NEW	Jason.Huang	———	Jason.Huang